ENGINE, MOUNTING & LONG BLOCK - Z26NEY99A4/B4/A6/B6 (C703089)

RZR - RZR XP S 1000 ULTIMATE (R01) - Z26NEY99A4/B4/A6/B6

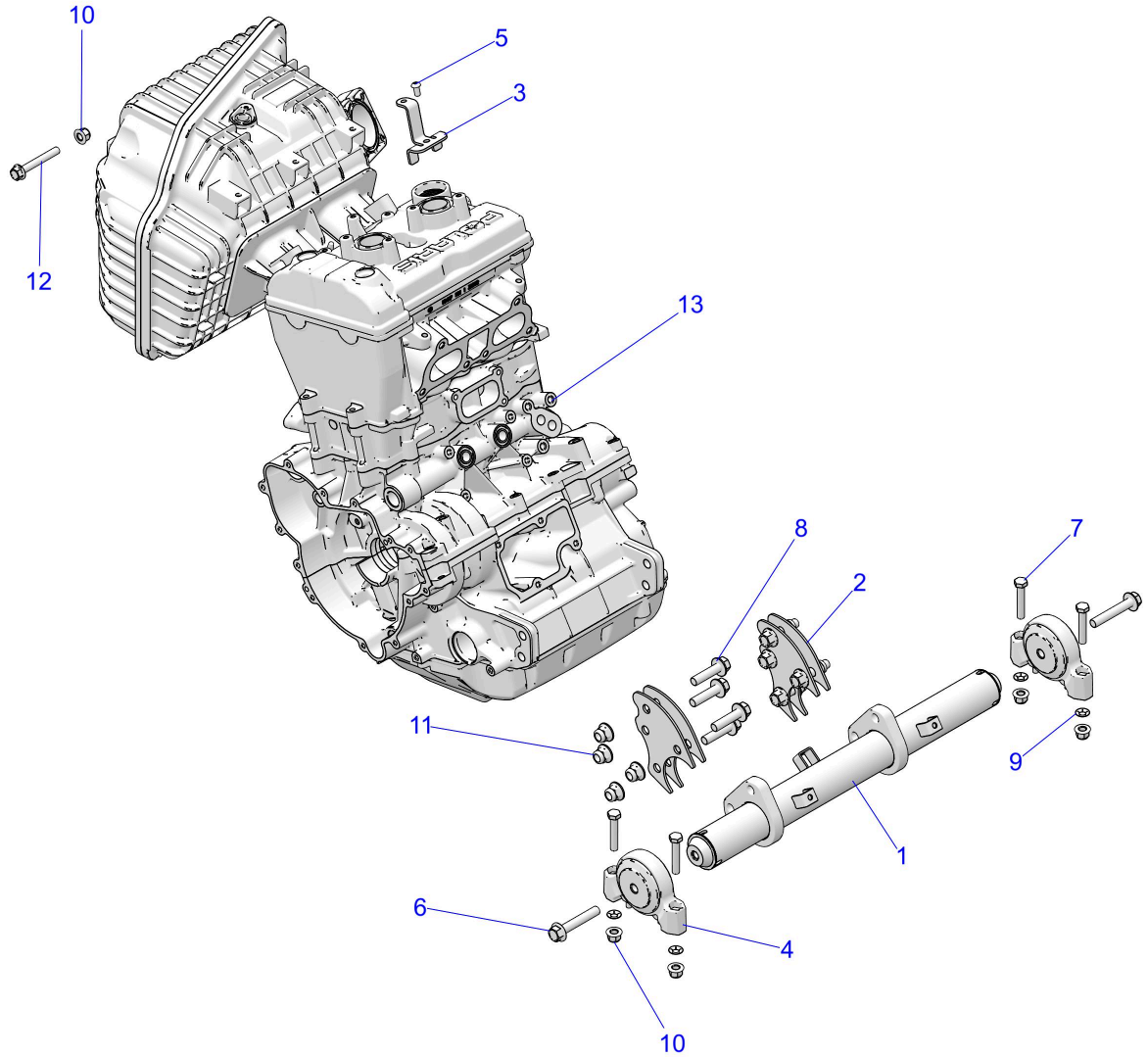

© 2021 Polaris Industries Inc. C703089

Reference #	*Part#*	*Description*	*Quantity*
1	1027289-329	WELD-MOUNT,ENGINE,ECOAT	1
2	5257952	BRACKET, MOUNT, ENGINE	4
3	5269637-329	BRKT-HEAD,VENT,LINE,ECOAT	1
4	1332955	MOUNT-ISOLATOR,DRIVELINE	2
5	7518330	SCR-TORX BTNHD,M6X12,0600129	1
6	7521333-60	SCR-HXFL-M10X1.5X60 10.9 ZFB	2
7	7519097	SCREW-HH M8X1.25X45 8.8 ZOD	4
8	7519332	SCR-HXFL-M10X1.25X40 8.8 ZOD	8
9	7547030	NUT-5/16-PAL-Y	4
10	7547332	NUT- M8X1.25, FLG, NYLOC-OLIVE D	5

11	7547333	NUT-HXFL M10X1.25 8 ZTB NYL	8
12	7519298	SCR-HXFL-M8X1.25X60 8.8 ZOD	1
13	2212961	K-LONG BLOCK 999MB	1

Copyright 1996-2026 Polaris Industries U.S.A All rights reserved.